City of Brisbane
Agenda Report

DATE: City Council Meeting of May 5, 2016

TO: Honorable Mayor and City Council

FROM: Community Development Director via City Manager

SUBJECT: Ordinance No. 576 (Zoning Text Amendment RZ-5-11) to Amend Brisbane Municipal Code Title 17 Regarding Garage/Carport Minimum Setbacks and Height Limits in the R Residential Districts, Off-Street Parking Regulations, and Alteration/Expansion of Nonconforming Structures

City Council Goals:

To provide for effective and efficient delivery of City services (Goal #1).
To preserve and enhance livability and diversity of neighborhoods (Goal #14).

Purpose:

To adopt new and revised residential parking requirements, to update the parking requirements for various other uses, and to revise the development standards for garages and carports in the residential zoning districts.

Recommendation:

That the City Council introduce Ordinance No. 576, with revisions as recommended by the City Council's Planning Issues Ad Hoc Subcommittee.

Background:

At its public hearing on April 7, 2016, the City Council requested that additional materials be provided to illustrate the differences between the Subcommittee's and the Planning Commission's differing recommendations regarding exceptions to the height limits for garages/carports in the R Districts.

Discussion:

The Planning Commission had recommended that on steep sites in the R-1, R-2, R-3 and R-BA Districts, garages and carports should be allowed to exceed the 20 ft. height limit within the front

15 ft. of the site (20 ft. in the R-BA District), as long as they would not exceed a height of 15 ft. above the elevation of the center of the street and as long as the height of any living area underneath would not exceed the standard height limit (Sections 17.06.040.G.2, 17.08.040.G.2, 17.10.040.G.2 & 17.12.040.G.2.b—see below). The City Council's Planning Issues Ad Hoc Subcommittee recommended elimination of these proposed changes to the Height of Structures Development Regulations for the R Districts. Instead, the Subcommittee found that the existing Variance procedure should continue to be used on a case by case basis to consider such height limit exceptions for garages and carports. This would allow adjoining property owners, particularly those located below and to the sides, to provide input through the public hearing process.

The text options under consideration are shown below:

R-1, R-2 & R-3 Districts
BMC Sections 17.06.040.G.2, 17.08.040.G.2 & 17.10.040.G.2

Current Text:

G. Height of Structures.

...

2. For a distance of fifteen (15) feet from the front lot line, the height of any structure shall not exceed twenty (20) feet as measured from finish grade; provided, however, garages may be constructed to a height of fifteen (15) feet above the elevation of the center of the adjacent street when permitted by Section 17.32.070 of this title and so long as the total height of the garage and any permitted living area underneath does not exceed thirty (30) feet from finish grade.

Planning Commission Recommendation:

G. Height of Structures.

...

2. For a distance of fifteen (15) feet from the front lot line, the height of any structure shall not exceed twenty (20) feet as measured from finish grade; provided, however, garages *and carports* may be constructed to a height of fifteen (15) feet above the elevation of the center of the adjacent street when permitted by Section 17.32.070 of this title. *A garage or carport in compliance with this subsection may exceed a height of thirty (30) feet, but the height of* ~~and so long as the total height of the garage and~~ any permitted living area underneath *shall* ~~does~~ not exceed thirty (30) feet from finish grade.

City Council Planning Issues Subcommittee Recommendation:

G. Height of Structures.

...

2. For a distance of fifteen (15) feet from the front lot line, the height of any structure shall not exceed twenty (20) feet as measured from finish grade; provided, however, garages *and carports* may be constructed to a height of fifteen (15) feet above the elevation of the center of the adjacent street when permitted by Section 17.32.070 of this title and so long as

the total height of the garage*/carport* and any permitted living area underneath does not exceed thirty (30) feet from finish grade.R-BA District

BMC Section 17.12.040.G.2.b

Current Text:

G. Height of Structures.

...

2. For a distance of twenty (20) feet from the front lot line, the height of any structure shall not exceed twenty (20) feet as measured from finish grade; provided, however,

a. residential structures on sites sloping down from the adjacent street may be constructed to a height of twenty (20) feet above the elevation of the center of the street; and

b. garages may be constructed to a height of fifteen (15) feet above the elevation of the center of the adjacent street when permitted by Section 17.32.070 of this Title and so long as the total height of the garage and any permitted living area underneath does not exceed thirty-five (35) feet from finish grade.

Planning Commission Recommendation:

G. Height of Structures.

...

2. For a distance of twenty (20) feet from the front lot line, the height of any structure shall not exceed twenty (20) feet as measured from finish grade; provided, however,

a. residential structures on sites sloping down from the adjacent street may be constructed to a height of twenty (20) feet above the elevation of the center of the street; and

b. garages *and carports* may be constructed to a height of fifteen (15) feet above the elevation of the center of the adjacent street when permitted by Section 17.32.070 of this Title. *A garage or carport in compliance with this subsection may exceed a height of thirty-five (35) feet, but the height of* ~~and so long as the total height of the garage and~~ any permitted living area underneath *shall* ~~does~~ not exceed thirty-five (35) feet from finish grade.

City Council Planning Issues Subcommittee Recommendation:

G. Height of Structures.

...

2. For a distance of twenty (20) feet from the front lot line, the height of any structure shall not exceed twenty (20) feet as measured from finish grade; provided, however,

a. residential structures on sites sloping down from the adjacent street may be constructed to a height of twenty (20) feet above the elevation of the center of the street; and

b. garages *and carports* may be constructed to a height of fifteen (15) feet above the elevation of the center of the adjacent street when permitted by Section 17.32.070 of this Title and so long as the total height of the garage*/carport* and any permitted living area underneath does not exceed thirty-five (35) feet from finish grade.

Designing a garage or carport that complies with the Municipal Code's requirements involves a number of factors: height limits, site slope, required front setbacks, elevation of the center of the street, driveway slope, and distance between the street and the front property line. In the R-1, R-2 and R-3 Districts, the standard building height limit varies from 28 to 30 ft. based upon the slope of the property (as determined per BMC Section 17.02.730). In the R-BA District, the standard height limit is 35 ft., regardless of the slope of the site. Per BMC Section 17.02.400.A, building height is measured as the difference in elevation ("vertical distance") between the midpoint ("average height") of the highest gable of a pitched roof and the lowest finished grade within 5 ft. of the building ("finish grade" is distinguished from "natural grade" in BMC Section 17.02.360). Note that per BMC Section 17.02.400.A, "When the finished grade results from fill, the reference datum shall be the lowest point of elevation of the natural grade prior to the placement of the fill. In the case of a stepped or terraced building, each segment of the building shall be separately measured and the height of the building shall be the maximum height of the highest segment."

To help minimize the visual effect of building height upon the streetscape, a 20 ft. height limit applies within the front 15 ft. of the property (the front 20 ft. in the R-BA District). An exception to this lower height limit currently allows garages on slopes of 15% or more to be constructed within the front setback to a height of 15 ft. above the elevation of the center of the street, so long as the total height of the garage and any permitted living area underneath does not exceed 30 ft. from finish grade (defined in BMC Section 17.02.360.A) in the R-1, R-2 and R-3 Districts or 35 ft. in the R-BA District. Note that in addition to the required setbacks (per BMC Sections 17.06.040.D.1.a & b and 17.32.070.A.3.a), the location of the garage/carport may be determined by the necessary length of the driveway to accommodate required parking and by the maximum permitted 20% driveway slope (BMC Section 17.34.120, renumbered 17.34.040.H in the draft ordinance). The length and slope of the driveway are affected not just by the slope of the site, but also by the location of the front property line relative to the lanes of traffic in the improved street.

Attached is a schematic comparison of scenarios for downslope garage/carport height under the current Municipal Code and the Planning Commission's recommended ordinance. These were provided to the Subcommittee at its 7/1/15 meeting to help illustrate the potential thresholds at which the slope of a property affects its ability to accommodate a garage/carport that complies with the applicable height limits. The steeper the site, the closer to the street the garage/carport would have to be located in order to comply with the height limit for the garage/carport and any living area beneath it. If this results in the driveway too short to accommodate required parking, it will become necessary to reverse the slope of the driveway, so that it drops from the street, which increases the likelihood of visibility and drainage issues. With the Planning Commission's recommended exception to the standard height limit, garages/carports with standard driveways that slope down to the street would be accommodated on steeper sites without a Variance than under the current Municipal Code. These garages/carports would appear to be no taller from the street; although, they could be 10+/- ft. taller at the rear.

Also attached are photographs of houses on steep downslopes chosen to illustrate some of the issues identified above.

359 Kings Road: This is an example of a garage accessed via a driveway that rises from the street. It appears that the garage is more than 15 ft. from the front property line. The house was built before the standard height limit was dropped from 35 ft. to 30 ft.

200 Annis Road: The front door to this recently built home is located below street level. The garage is set close to the street to reduce its height as measured from grade at the rear. If the garage were set farther back from the street, the driveway could have accommodated parking spaces; although, the garage would be taller at the rear.

345 Kings Road: Drainage grates were installed to prevent runoff from flowing into the garage. Raising the garage so that the driveway would slope down to the street would increase its height as measured from grade at the rear.

381 Kings Road: The right-of-way cuts at an angle across the front of this house, so that a corner of the building is estimated to be located less than 15 ft. from the front property line. Note that the pitched roof behind the garage appears to be more than 20 ft. high, but it is also more than 15 ft. from the front property line.

317 Kings Road: The driveway to this house drops steeply from the street.

Based upon staff's further research, it appears that only a limited numbers of properties are likely to benefit from the expanded exception as recommended by the Planning Commission. These cases would generally be limited to lots with extremely steep slopes and dependent on project-specific design details, conditions which can be taken into account in a variance process.

In addition, the City Attorney recommends that Sections 17.34.040.G.3 and 17.34.050 of the draft ordinance be revised to clarify that existing dwellings and garages would not be classified as "nonconforming" as a result of adoption of the proposed parking ordinance revisions.

17.34.040.G

3. Garages existing as of __ [the date this section takes effect], constructed in compliance with applicable standards ~~*then*~~ *that were* in effect *at the time the garage was issued a building permit*, shall be considered conforming until such time as they are substantially modified or replaced, except that Section 17.38.090 shall apply in the event that they are damaged or destroyed by fire, flood, wind, earthquake, or other calamity.

17.34.050

A. Dwelling units existing as of __ [the date this section takes effect], constructed in compliance with applicable standards ~~*then*~~ *that were* in effect *at the time the dwelling unit was issued a building permit*, shall be considered conforming in terms of the parking required by this chapter until such time as they are expanded, except as permitted in Subsection B of this Section, or replaced, except that Section 17.38.090 shall apply in the event that they are damaged or destroyed by fire, flood, wind, earthquake, or other calamity.

Environmental Determination:

A Negative Declaration (State Clearinghouse No. 2015012053) was adopted by the City Council for the 2015-2022 Housing Element on April 2, 2015.

Fiscal Impact:

None.

Measure of Success:

Production of additional dwelling units by avoiding unreasonable government constraints to the provision of housing.

Attachments:

Comparison of Scenarios under the Existing and Planning Commission Recommended Ordinances (attachment to 7/1/15 Subcommittee Report)
Photographs of Houses on Steep Downslopes
Draft Ordinance No. 576 as revised by City Council's Planning Issues Ad Hoc Subcommittee and the City Attorney

John Swiecki, Community Development Director Clay Holstine, City Manager

On a ±30% slope, a ±10' tall garage set back as far as 15' from the front property line can fit under the 30' height limit.

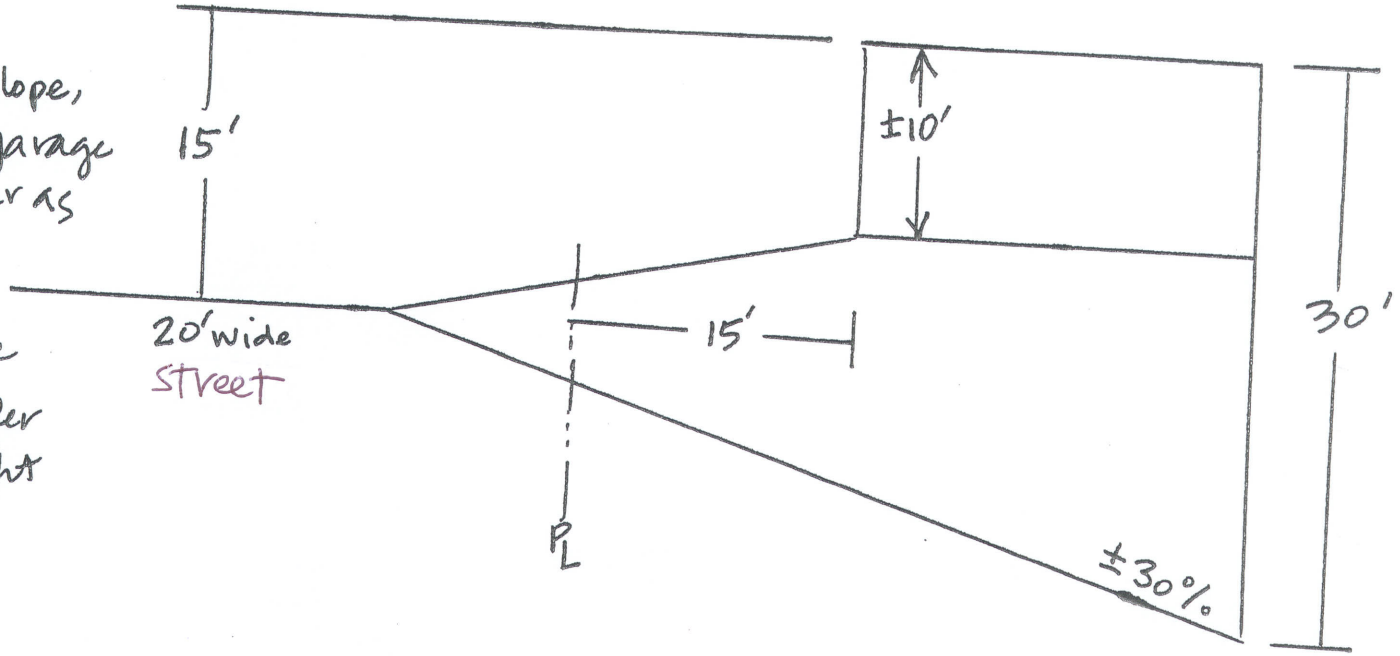

The steeper the site, the more the garage would have to be shifted forward (and the driveway shortened) to stay under the 30' height limit.

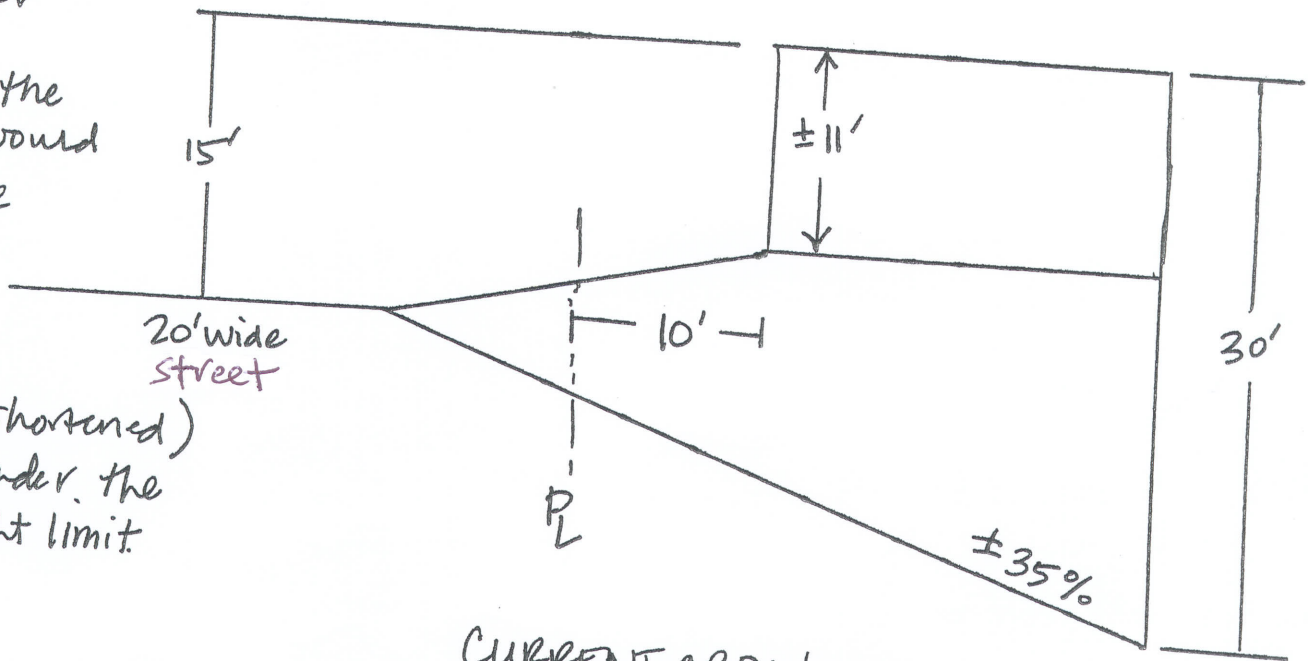

CURRENT ORDINANCE

Assumptions:
- 20' wide improved street centered within 40' wide right-of-way
- 20% maximum slope driveway
- 21' long garage

COMPARISON OF SCENARIOS FOR GARAGE HEIGHT
#1

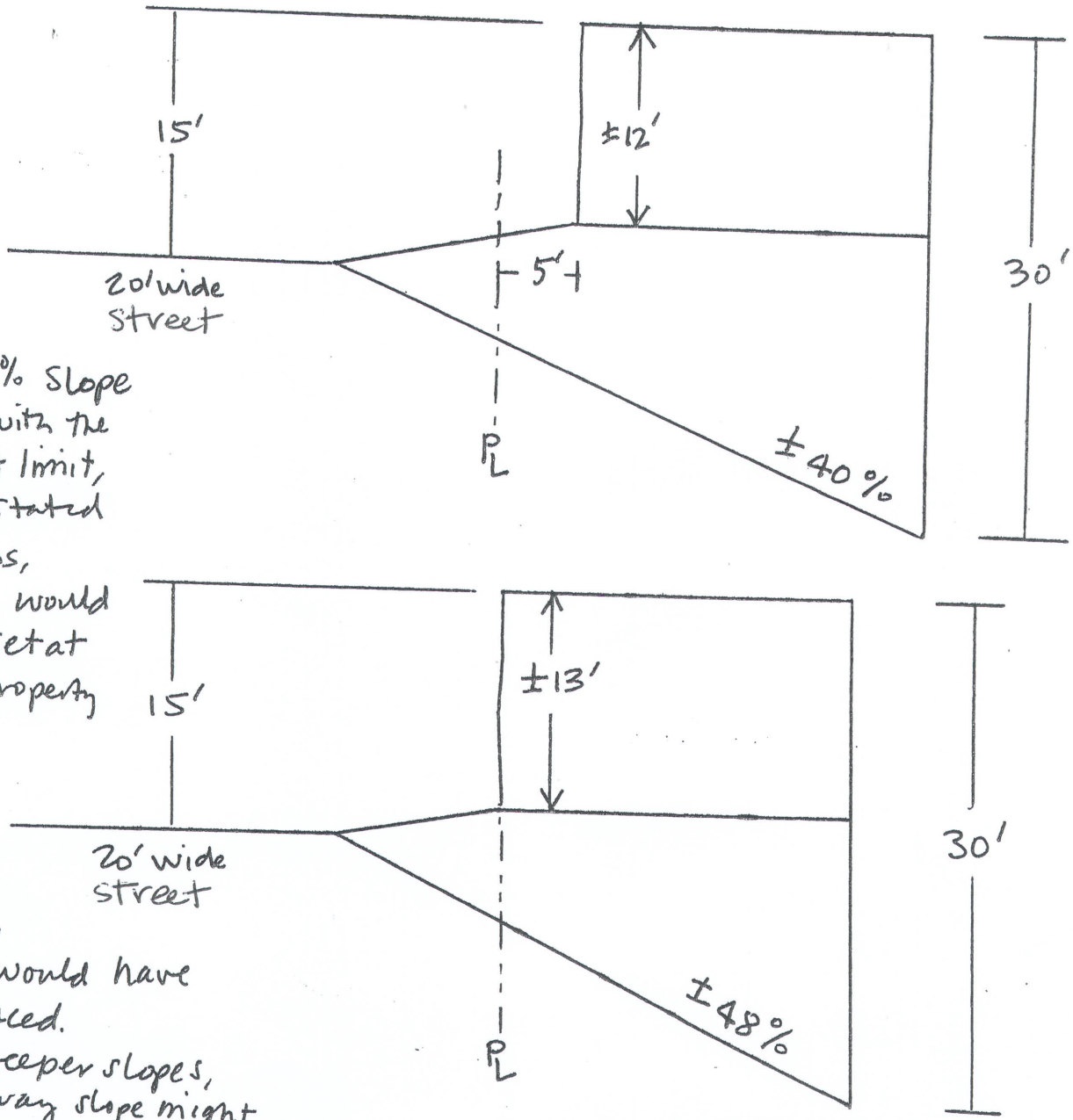

On a ±50% slope to comply with the 30' height limit, given the stated assumptions, the garage would have to be set at the front property line.

To provide a longer driveway, its slope would have to be reduced. On even steeper slopes, the driveway slope might have to be reversed, so that it drops below street level.

CURRENT ORDINANCE

ASSUMPTIONS:

20' wide improved street centered within 40' wide right-of-way

20% maximum slope driveway

21' long garage

COMPARISON OF SCENARIOS FOR GARAGE HEIGHT

#2

With the current garage height limit of 15' above the center of the street and the recommended exception to the 30' overall height limit for garages, a 10' tall garage can be accommodated on slopes steeper than 50% with the living area immediately beneath complying with the 30' overall height limit.

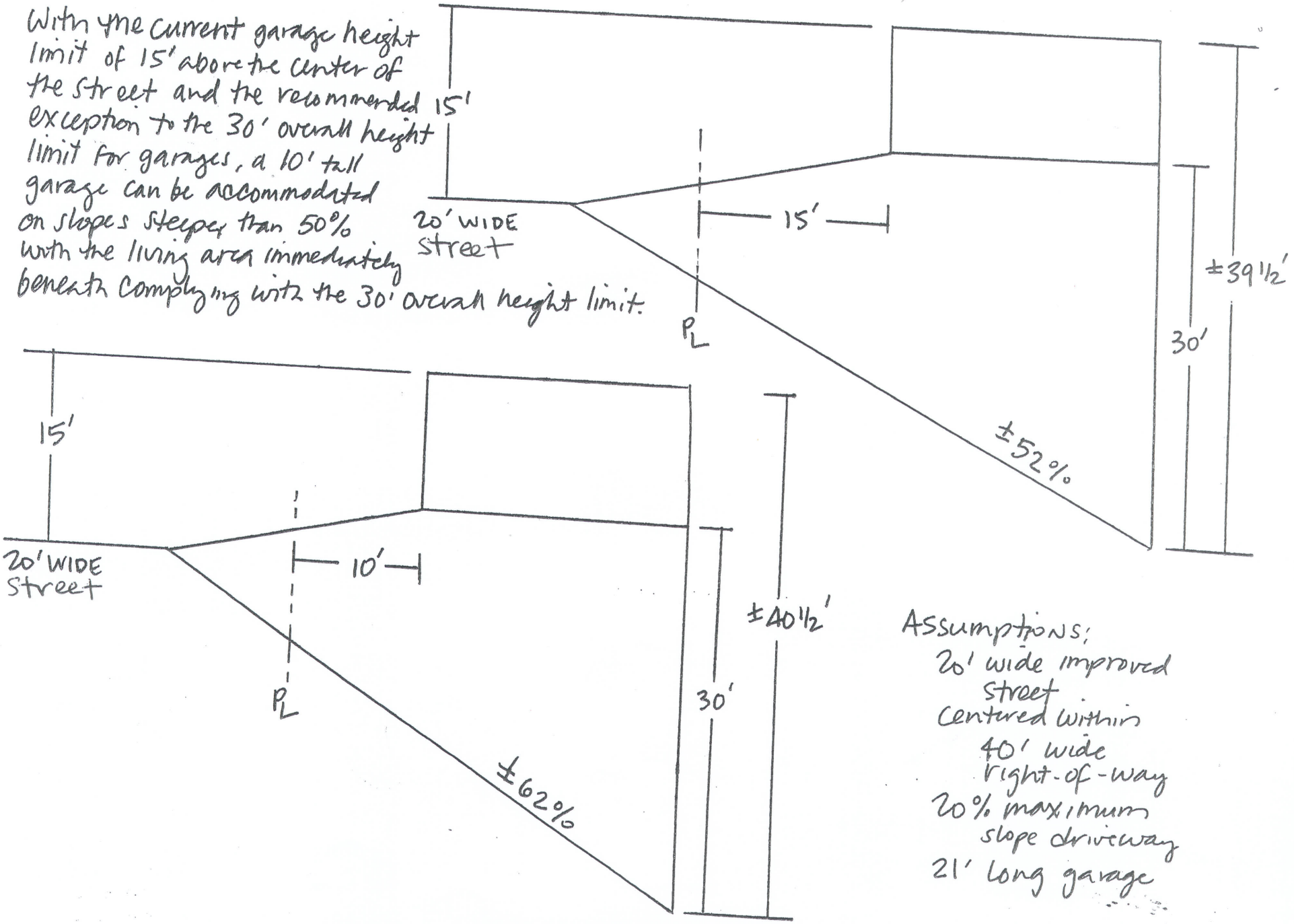

Assumptions:
- 20' wide improved street centered within 40' wide right-of-way
- 20% maximum slope driveway
- 21' long garage

RECOMMENDED ORDINANCE
COMPARISON OF SCENARIOS FOR GARAGE HEIGHT
#3

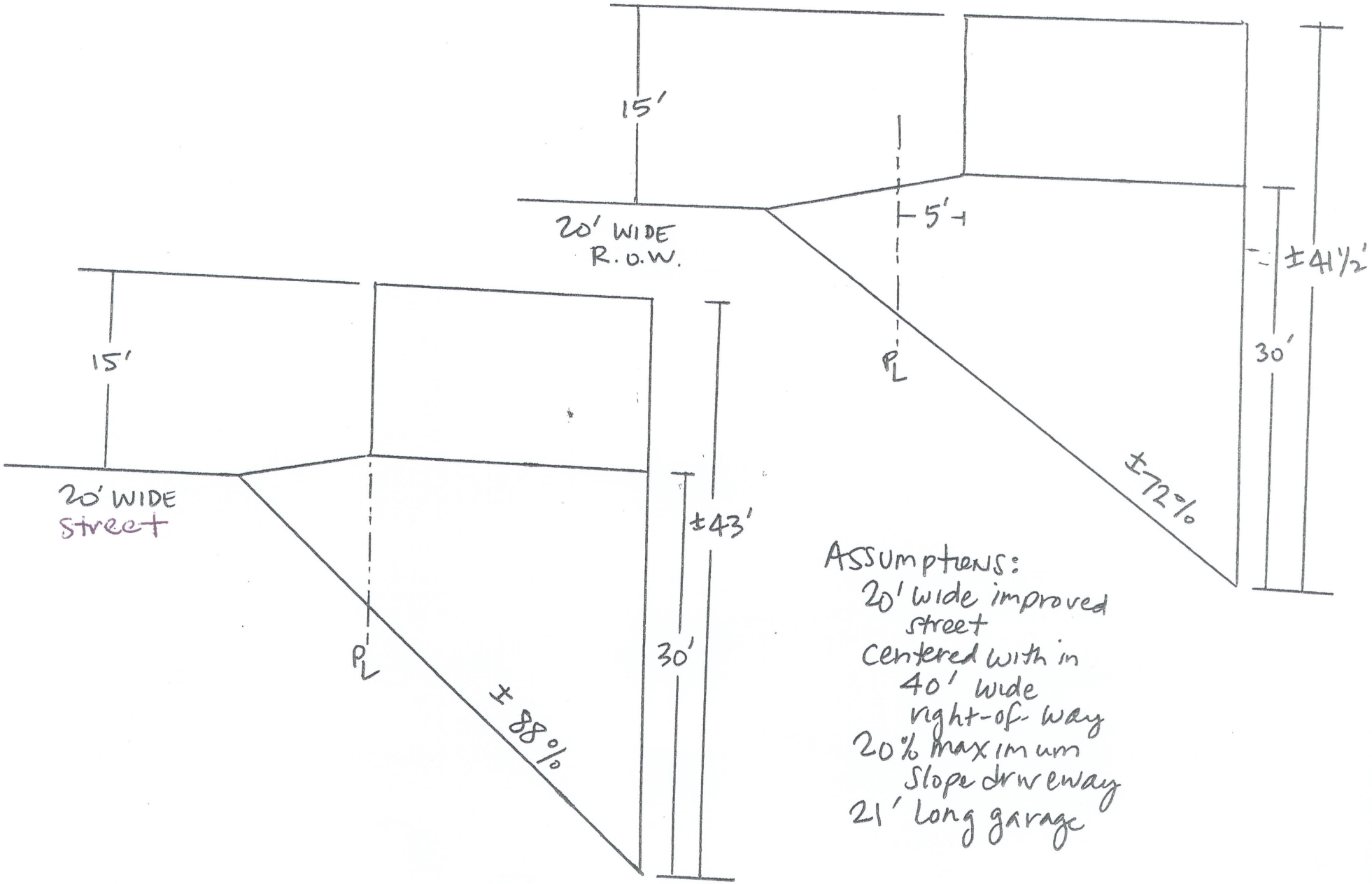

Assumptions:
- 20' wide improved street centered with in 40' wide right-of- way
- 20% maximum Slope drive way
- 21' long garage

RECOMMENDED ORDINANCE
COMPARISON OF SCENARIOS FOR GARAGE HEIGHT
#4



359 Kings Road

(R-1 District)







200 Annis Road
(R-BA District)







345 Kings Road
(R-1 District)



381 Kings Road
(R-1 District)



317 Kings Road
(R-1 District)

draft

ORDINANCE NO. 576

(as revised by the City Council's Planning Issues Ad Hoc Subcommittee and City Attorney)

AN ORDINANCE OF THE CITY OF BRISBANE AMENDING CHAPTER 17.06, R-1 RESIDENTIAL DISTRICT; CHAPTER 17.08, R-2 RESIDENTIAL DISTRICT; CHAPTER 17. 10, R-3 RESIDENTIAL DISTRICT; CHAPTER 17.12, R-BA BRISBANE ACRES RESIDENTIAL DISTRICT; CHAPTER 17.32, GENERAL USE REGULATIONS; CHAPTER 17.34, OFF-STREET PARKING; AND CHAPTER 17.38, NONCONFORMING USES AND STRUCTURES; OF THE MUNICIPAL CODE

WHEREAS, pursuant to California Government Code Section 65852.2(e), the City Council finds that additional parking requirements for secondary dwelling units exceeding one parking space per unit or per bedroom are directly related to the use of the second unit and are consistent with neighborhood standards applicable to duplex and multi-family dwellings.

THE CITY COUNCIL OF THE CITY OF BRISBANE HEREBY ORDAINS AS FOLLOWS:

SECTION 1: Section 17.06.040 in Chapter 17.06 of the Municipal Code is amended to read as follows:

17.06.040 – Development Regulations. The following development regulations shall apply to any lot in the R-1 district:

A. Lot Area.

1. The minimum area of any lot shall be five thousand (5,000) square feet.

2. A single-family dwelling may be constructed on a lot of record with an area of less than five thousand (5,000) square feet, subject to the provisions of this chapter and the limitations set forth in Section 17.32.100.

B. Density of Development. Not more than one dwelling unit shall be located on each lot in the R-1 district, except for a secondary dwelling unit authorized pursuant to Chapter 17.43 of this title.

C. Lot Dimensions. The minimum dimensions of any lot shall be as follows:

Width	Depth
50 feet	100 feet

D. Setbacks. The minimum required setbacks for any lot shall be as follows:

1. Front setback: fifteen (15) feet, with the following exceptions:

a. Where the lot has a slope of fifteen percent (15%) or greater, the minimum front setback may be reduced to ten (10) feet.

b. Where fifty percent (50%) or more of the lots of record in a block have been improved with single-family dwellings, the minimum front setback may be the average distance of the front outside wall of the single-family structures from the front lot line, if

less than fifteen (15) feet. Notwithstanding the foregoing, the minimum front setback for garages or carports shall be ten (10) feet, except where a lesser distance is determined by the city engineer to be safe in terms of pedestrian and vehicular traffic.

2. Side setback: five (5) feet, with the exception that a lot having a width of less than fifty (50) feet may have a side setback reduced to ten percent (10%) of the lot width, but in no event less than three (3) feet or the minimum setback required by the Uniform Building Code, whichever is greater. Notwithstanding the foregoing, the minimum side setback for garages or carports accessed from a street or alley along that side of the lot shall be ten (10) feet, except where a lesser distance is determined by the city engineer to be safe in terms of pedestrian and vehicular traffic.

3. Rear setback: ten (10) feet.

E. Lot Coverage. The maximum coverage by all structures on any lot shall be forty percent (40%).

F. Floor Area Ratio. The maximum floor area ratio for all buildings on a lot shall be 0.72. Where the size of the lot is three thousand seven hundred (3,700) square feet or less, one covered parking space designed to accommodate a full-size automobile shall be excluded from the calculation of floor area ratio; provided, however, such exclusion shall not exceed a total area of two hundred (200) square feet.

G. Height of Structures.

1. Except as otherwise provided in subsection (G)(2) of this section, the maximum height of any structure shall be as follows:

a. Twenty-eight (28) feet, for lots having a slope of less than twenty percent (20%); or

b. Thirty (30) feet, for lots having a slope of twenty percent (20%) or more.

2. For a distance of fifteen (15) feet from the front lot line, the height of any structure shall not exceed twenty (20) feet as measured from finish grade; provided, however, garages and carports may be constructed to a height of fifteen (15) feet above the elevation of the center of the adjacent street when permitted by Section 17.32.070 of this title and so long as the total height of the garage/carport and any permitted living area underneath does not exceed thirty (30) feet from finish grade.

H. Articulation Requirements. Unless exempted, outside walls that are greater in size than twenty (20) feet in width and twenty (20) feet in height shall have a cumulative area of articulation as follows:

1. Front outside wall: Thirty percent (30%) articulation.

2. Side outside walls:

a. Interior side outside wall: No articulation requirement.

b. Exterior side outside wall: Where the structure is located on a lot having an average width of forty (40) feet or greater, the articulation requirement for the exterior side outside wall shall be twenty percent (20%). No articulation shall be required for the exterior side outside wall of structures located on lots having an average width of less than forty (40) feet.

3. Rear outside wall: Thirty percent (30%) articulation.

4. Exemptions: Single story two (2) car garages and accessory structures not exceeding a floor area of one hundred twenty (120) square feet shall be exempted from all articulation requirements.

I. Landscaping Requirements.

1. Front Setback. A minimum of fifteen percent (15%) of the front setback area shall be landscaped where the lot has a front lot line of thirty (30) feet or greater.

2. Downslope Lots. The rear of any newly constructed main structure on a downslope lot shall be screened with trees and shrubs in accordance with a landscape plan approved by the planning director.

3. New and replacement, irrigated landscapes of one thousand (1,000) square feet, or more, shall be subject to the water conservation in landscaping ordinance. Refer to Chapter 15.70.

J. Nonconforming Residential Structures and Uses. Nonconforming residential structures and nonconforming residential uses, as defined in Section 17.02.560, may be repaired, restored, reconstructed, enlarged or expanded in accordance with the provisions of Chapters 17.38 and 17.34 of this title.

K. Recycling Area Requirements. For new subdivisions containing an area where solid waste is collected and loaded in a location which serves five or more living units, adequate, accessible and convenient areas for depositing, collecting and loading recyclable materials in receptacles shall be provided to serve the needs of the living units which utilize the area. This requirement shall also apply to all institutional buildings and City facilities (including buildings, structures, and outdoor recreation areas owned by the City) where solid waste is collected and loaded. The area shall be located and fully enclosed so as to adequately protect neighboring uses from adverse impacts such as noise, odor, vectors, wind-blown litter or glare. The area shall be designed to prevent storm water run-on to the area and runoff from the area, and roofs shall be designed to drain away from neighboring properties. A sign clearly identifying all recycling and solid waste collection and loading areas and the materials accepted therein shall be posted adjacent to all points of direct access to the area.

SECTION 2: Section 17.08.040 in Chapter 17.08 of the Municipal Code is amended to read as follows:

17.08.040 – Development Regulations. The following development regulations shall apply to any lot in the R-2 district:

A. Lot Area.

1. The minimum area of any lot shall be five thousand (5,000) square feet, except as otherwise provided in Section 17.08.040(B).

2. A single-family dwelling may be constructed on a lot of record with an area of less than five thousand (5,000) square feet, subject to the provisions of this chapter and the limitations set forth in Section 17.32.100.

B. Density of Development. The minimum lot area for each dwelling unit on the site shall be two thousand five hundred (2,500) square feet; provided, however, a lot having an area of four thousand nine hundred fifty (4,950) square feet or greater shall be considered conforming for a development density of two (2) units.

C. Lot Dimensions. The minimum dimensions of any lot shall be as follows:

Width	Depth
50 feet	100 feet

D. Setbacks. The minimum required setbacks for any lot shall be as follows:

1. Front setback: fifteen (15) feet, with the following exceptions:

a. Where the lot has a slope of fifteen percent (15%) or greater, the minimum front setback may be reduced to ten (10) feet.

b. Where fifty percent (50%) or more of the lots of record in a block have been improved with single-family dwellings, duplexes or multiple-family dwellings, or any combination thereof, the minimum front setback for single-family dwellings may be the average distance of the front outside wall of the residential structures from the front lot line, if less than fifteen (15) feet. Notwithstanding the foregoing, the minimum front setback for garages or carports shall be ten (10) feet, except where a lesser distance is determined by the city engineer to be safe in terms of pedestrian and vehicular traffic.

2. Side setbacks: Side setbacks shall be five (5) feet, with the exception that a lot having a width of less than fifty (50) feet may have a side setback reduced to ten percent (10%) of the lot width, but in no event less than three (3) feet or the minimum setback required by the Uniform Building Code, whichever is greater. Notwithstanding the foregoing, the minimum side setback for garages or carports accessed from a street or alley along that side of the lot shall be ten (10) feet, except where a lesser distance is determined by the city engineer to be safe in terms of pedestrian and vehicular traffic.

3. Rear setback: ten (10) feet.

E. Lot Coverage. The maximum coverage by all structures on any lot shall be fifty percent (50%).

F. Floor Area Ratio. The maximum floor area ratio for all buildings on a lot shall be 0.72, subject to the following exclusions:

1. In the case of single-family dwellings, where the size of the lot is three thousand seven hundred (3,700) square feet or less, one covered parking space designed to accommodate a full-size automobile shall be excluded from the calculation of floor area ratio; provided, however, such exclusion shall not exceed a total area of two hundred (200) square feet.

2. In the case of duplexes and multiple-family dwellings, the area of all covered parking spaces required to be provided for the site shall be excluded from the calculation of floor area ratio; provided, however, such exclusion shall not exceed a total area of four hundred (400) square feet per unit.

G. Height of Structures.

1. Except as otherwise provided in subsection (G)(2) of this section, the maximum height of any structure shall be as follows:

a. Twenty-eight (28) feet, for lots having a slope of less than twenty percent (20%); or

b. Thirty (30) feet, for lots having a slope of twenty percent (20%) or more.

2. For a distance of fifteen (15) feet from the front lot line, the height of any structure shall not exceed twenty (20) feet as measured from finish grade; provided, however, garages and carports may be constructed to a height of fifteen (15) feet above the elevation of the center of the adjacent street when permitted by Section 17.32.070 of this title and so long as the total height of the garage/carport and any permitted living area underneath does not exceed thirty (30) feet from finish grade.

H. Articulation Requirements. Unless exempted, outside walls that are greater in size than twenty (20) feet in width and twenty (20) feet in height shall have a cumulative area of articulation as follows:

1. Front outside wall: Thirty percent (30%) articulation.

2. Side outside walls:

a. Interior side outside wall: No articulation requirement.

b. Exterior side outside wall: Where the structure is located on a lot having an average width of forty (40) feet or greater, the articulation requirement for the exterior side outside wall shall be twenty percent (20%). No articulation shall be required for the exterior side outside wall of structures located on lots having an average width of less than forty (40) feet.

3. Rear outside wall: Thirty percent (30%) articulation.

4. Exemptions: Single story two car garages and accessory structures not exceeding a floor area of one hundred twenty (120) square feet shall be exempted from all articulation requirements.

I. Landscaping Requirements.

1. Front Setback. A minimum of fifteen percent (15%) of the front setback area shall be landscaped where the lot has a front lot line of thirty (30) feet or greater.

2. Downslope Lots. The rear of any newly constructed main structure on a downslope lot shall be screened with trees and shrubs in accordance with a landscape plan approved by the planning director.

3. Sites with Three (3) or More Units. Not less than ten percent (10%) of the lot area shall be improved with landscaping where three (3) or more dwelling units are located on the same site.

4. New and replacement, irrigated landscapes of one thousand (1,000) square feet, or more, shall be subject to the water conservation in landscaping ordinance. Refer to Chapter 15.70.

J. Nonconforming Residential Structures and Uses. Nonconforming residential structures and nonconforming residential uses, as defined in Section 17.02.560, may be repaired, restored, reconstructed, enlarged or expanded in accordance with the provisions of Chapters 17.38 and 17.34 of this title.

K. Recycling Area Requirements:

1. Adequate, accessible and convenient areas for depositing, collecting and loading recyclable materials in receptacles shall be provided. The area shall be located and fully enclosed so as to adequately protect neighboring uses from adverse impacts such as noise, odor, vectors, wind-blown litter or glare. The area shall be designed to prevent storm water run-on to the area and runoff from the area, and roofs shall be designed to drain away from neighboring properties. A sign clearly identifying all recycling and solid waste collection and loading areas and the materials accepted therein shall be posted adjacent to all points of direct access to the area.

2. This requirement shall apply to all new residential buildings having five or more living units, institutional buildings and City facilities (including buildings, structures, and outdoor recreation areas owned by the City) where solid waste is collected and loaded. This requirement shall also apply to such existing developments for which building permit applications are submitted within a 12-month period collectively adding 30 percent or more to the existing floor area of the development project.

SECTION 3: Section 17.10.040 in Chapter 17.10 of the Municipal Code is amended to read as follows:

17.10.040 – Development Regulations. The following development regulations shall apply to any lot in the R-3 district:

A. Lot Area.

1. The minimum area of any lot shall be five thousand (5,000) square feet, except as otherwise provided in subsection B of this section.

2. A single-family dwelling may be constructed on a lot of record with an area of less than five thousand (5,000) square feet, subject to the provisions of this chapter and the limitations set forth in Section 17.32.100.

B. Density of Development. The minimum lot area for each dwelling unit on the site shall be one thousand (1,500) square feet; provided, however, a lot having an area of four thousand nine hundred fifty (4,950) square feet or greater shall be considered conforming for a development density of three (3) units.

C. Lot Dimensions. The minimum dimensions of any lot shall be as follows:

Width	Depth
50 feet	100 feet

D. Setbacks. The minimum required setbacks for any lot shall be as follows:

1. Front setback: fifteen (15) feet, with the following exceptions:

a. Where the lot has a slope of fifteen percent (15%) or greater, the minimum front setback may be reduced to ten (10) feet.

b. Where fifty percent (50%) or more of the lots of record in a block have been improved with single-family dwellings, duplexes or multiple-family dwellings, or any combination thereof, the minimum front setback for single-family dwellings may be the average distance of the front outside wall of the residential structures from the front lot line, if less than fifteen (15) feet. Notwithstanding the foregoing, the minimum front setback for garages or carports shall be ten (10) feet, except where a lesser distance is determined by the city engineer to be safe in terms of pedestrian and vehicular traffic.

2. Side setbacks: Side setbacks shall be five (5) feet, with the exception that a lot having a width of less than fifty (50) feet may have a side setback reduced to ten percent (10%) of the lot width, but in no event less than three (3) feet or the minimum setback required by the Uniform Building Code, whichever is greater. Notwithstanding the foregoing, the minimum side setback for garages or carports accessed from a street or alley along that side of the lot shall be ten (10) feet, except where a lesser distance is determined by the city engineer to be safe in terms of pedestrian and vehicular traffic.

3. Rear setback: ten (10) feet.

E. Lot Coverage. The maximum coverage by all structures on any lot shall be sixty percent (60%).

F. Floor Area Ratio. The maximum floor area ratio for all buildings on a lot shall be 0.72, subject to the following exclusions:

1. In the case of single-family dwellings, where the size of the lot is three thousand seven hundred (3,700) square feet or less, one covered parking space designed to accommodate a full-size automobile shall be excluded from the calculation of floor area ratio; provided, however, such exclusion shall not exceed a total area of two hundred (200) square feet.

2. In the case of duplexes and multiple-family dwellings, the area of all covered parking spaces required to be provided for the site, shall be excluded from the calculation of floor area ratio; provided, however, such exclusion shall not exceed a total area of four hundred (400) square feet per unit.

G. Height of Structures.

1. Except as otherwise provided in subsection (G)(2) of this section, the maximum height of any structure shall be as follows:

a. Twenty-eight (28) feet, for lots having a slope of less than twenty percent (20%); or

b. Thirty (30) feet, for lots having a slope of twenty percent (20%) or more.

2. For a distance of fifteen (15) feet from the front lot line, the height of any structure shall not exceed twenty (20) feet as measured from finish grade; provided, however, garages and carports may be constructed to a height of fifteen (15) feet above the elevation of the center of the adjacent street when permitted by Section 17.32.070 of this title and so long as the total height of the garage/carport and any permitted living area underneath does not exceed thirty (30) feet from finish grade.

H. Articulation Requirements. Unless exempted, outside walls that are greater in size than twenty (20) feet in width and twenty (20) feet in height shall have a cumulative area of articulation as follows:

1. Front outside wall: Thirty percent (30%) articulation.

2. Side outside walls:

a. Interior side outside wall: No articulation requirement.

b. Exterior side outside wall: Where the structure is located on a lot having an average width of forty (40) feet or greater, the articulation requirement for the exterior side outside wall shall be twenty percent (20%). No articulation shall be required for the exterior side outside wall of structures located on lots having an average width of less than forty (40) feet.

3. Rear outside wall: Thirty percent (30%) articulation.

4. Exemptions: Single story two (2) car garages and accessory structures not exceeding a floor area of one hundred twenty (120) square feet shall be exempted from all articulation requirements.

I. Landscaping Requirements.

1. Front Setback. A minimum of fifteen percent (15%) of the front setback area shall be landscaped where the lot has a front lot line of thirty (30) feet or greater.

2. Downslope Lots. The rear of any newly constructed main structure on a downslope lot shall be screened with trees and shrubs in accordance with a landscape plan approved by the planning director.

3. Sites with Three (3) or More Units. Not less than ten percent (10%) of the lot area shall be improved with landscaping where three (3) or more dwelling units are located on the same site.

4. New and replacement, irrigated landscapes of one thousand (1,000) square feet, or more, shall be subject to the water conservation in landscaping ordinance. Refer to Chapter 15.70.

J. Nonconforming Residential Structures and Uses. Nonconforming residential structures and nonconforming residential uses, as defined in Section 17.02.560, may be repaired, restored, reconstructed, enlarged or expanded in accordance with the provisions of Chapters 17.38 and 17.34 of this title.

K. Recycling Area Requirements:

1. Adequate, accessible and convenient areas for depositing, collecting and loading recyclable materials in receptacles shall be provided. The area shall be located and fully

enclosed so as to adequately protect neighboring uses from adverse impacts such as noise, odor, vectors, wind-blown litter or glare. The area shall be designed to prevent storm water run-on to the area and runoff from the area, and roofs shall be designed to drain away from neighboring properties. A sign clearly identifying all recycling and solid waste collection and loading areas and the materials accepted therein shall be posted adjacent to all points of direct access to the area.

2. This requirement shall apply to all new residential buildings having five or more living units, institutional buildings and City facilities (including buildings, structures, and outdoor recreation areas owned by the City) where solid waste is collected and loaded. This requirement shall also apply to such existing developments for which building permit applications are submitted within a 12-month period collectively adding 30 percent or more to the existing floor area of the development project.

SECTION 4: Section 17.12.040 in Chapter 17.12 of the Municipal Code is amended to read as follows:

17.12.040 – Development Regulations. The following development regulations shall apply to any lot in the R-BA District:

A. Lot Area.

1. The minimum area of any lot shall be twenty thousand (20,000) square feet, except as otherwise provided in Section 17.12.050, Density transfer, and Section 17.12.055, Clustered development, of this Chapter.

2. A single-family dwelling may be constructed on a lot of record with an area of less than twenty thousand (20,000) square feet, subject to the provisions of this Chapter and the limitations set forth in Section 17.32.100.

B. Density of Development. Not more than one dwelling unit shall be located on each lot in the R-BA District, except for a secondary dwelling unit authorized by a permit granted pursuant to Chapter 17.43 of this Title.

C. Lot Dimensions.

1. In addition to the minimum lot area standard per Section 17.12.040.A, the minimum dimensions of any lot shall be as follows:

Width	Depth
110 feet	140 feet

2. Exceptions may be approved as part of the use permit required for density transfer in Section 17.12.050 or clustered development in Section 17.12.055 of this Chapter.

D. Setbacks. The minimum required setbacks for any lot shall be as follows:

1. Front setback: Ten (10) feet.

2. Side setback: Ten percent (10%) of the lot width, but in no event more than fifteen (15) feet or less than five (5) feet. Notwithstanding the foregoing, the minimum side setback for garages or carports accessed from a street along that side of the lot shall be ten (10) feet, except where a lesser distance is determined by the city engineer to be safe in terms of pedestrian and vehicular traffic.

3 Rear setback: ten (10) feet

E. Lot Coverage. The maximum coverage by all structures on any lot shall be twenty five percent (25%).

F. Floor Area Ratio. The maximum floor area ratio of all buildings on a lot shall be 0.72; provided, however, that in no event shall the floor area of all buildings on a lot exceed five thousand five hundred (5,500) square feet.

G. Height of Structures.

1. Except as otherwise provided in subsection (G)(2) of this section, the maximum height of any structure shall be thirty-five (35) feet.

2. For a distance of twenty (20) feet from the front lot line, the height of any structure shall not exceed twenty (20) feet as measured from finish grade; provided, however,

a. residential structures on sites sloping down from the adjacent street may be constructed to a height of twenty (20) feet above the elevation of the center of the street, so long; and

b. garages and carports may be constructed to a height of fifteen (15) feet above the elevation of the center of the adjacent street when permitted by Section 17.32.070 of this Title and so long as the total height of the garage/carport and any permitted living area underneath does not exceed thirty-five (35) feet from finish grade.

H. Wildland Interface. The development shall incorporate such measures as the Fire Chief may deem necessary to protect against the spread of fire between the site and the adjacent wildland.

I. HCP Compliance. All development within the R-BA District shall comply with the requirements of the San Bruno Mountain Area Habitat Conservation Plan (HCP), including site activity review, environmental assessments, and operating programs for planned management units, consistent with the objectives and obligations set forth in the HCP.

J. Articulation Requirements. Unless exempted, outside walls that are greater in size than twenty (20) feet in width and twenty (20) feet in height shall have a cumulative area of articulation as follows:

1. Front outside wall: Thirty percent (30%) articulation.

2. Side outside walls:

a. Interior side outside wall: No articulation requirement.

b. Exterior side outside wall: Where the structure is located on a lot having an average width of forty (40) feet or greater, the articulation requirement for the exterior side outside wall shall be twenty percent (20%). No articulation shall be required for the exterior side outside wall of structures located on lots having an average width of less than forty (40) feet

3. Rear outside wall: Thirty percent (30%) articulation.

4. Exemptions: Single story two car garages and accessory structures not exceeding a floor area of one hundred twenty (120) square feet shall be exempted from all articulation requirements.

K. Landscaping Requirements.

1. Landscape Plan. All development proposals shall include a landscape plan to be approved by the Planning Director in consultation with the HCP Plan Operator. The plan shall show all proposed landscaping and the location of all protected trees and rare plants. The landscape plan shall be consistent with all of the following objectives:

a. Preservation of protected trees and rare plants to the greatest extent possible;

b. Use of plants that are compatible with the natural flora and fauna, and are not invasive to the HCP area;

c. Use of water conserving plants;

d. Use of plants that will effectively screen structures and blend with the natural landscape; and

e. Use of landscaping that is fire resistant.

2. Irrigated Landscapes. New and replacement, irrigated landscapes of 1,000 square feet, or more, shall be subject to the Water Conservation in Landscaping Ordinance. Refer to Chapter 15.70.

L. Ridgeline. Development on any site through which a ridgeline runs as identified in Figure 17.02.695, Ridgelines, shall be subject to design permit approval.

1. In addition to the required contents of application for design permit set forth in Section 17.42.020.A, story poles certified by a licensed architect, surveyor, civil engineer or contractor to represent the height of the proposed building shall be erected at the locations of its outer corners and roof peaks according to a plan pre-approved by the Community Development Director. The upper one foot length of each pole shall be painted OSHA yellow so as to be clearly visible from a distance.

2. In addition to the findings required for issuance of design permits set forth in Section 17.42.040, the Planning Commission shall find that the building's placement, height, bulk and landscaping will preserve those public views of the San Bruno Mountain State and County Park as seen from the Community Park and from the Bay Trail along the Brisbane Lagoon and Sierra Point shorelines that are found to be of community-wide value. Methods to accomplish this may include varying the building's roofline to reflect the ridgeline's topography, orienting the building to minimize the impact of its profile upon public views, locating the building on the lower elevations of the site, and reducing the building's height below the maximum permitted in the district.

3. An existing structure may be repaired or replaced in accordance with Section 17.38.090 without design permit approval, but any alteration or expansion which raises any portion of the roofline or increases the building's lot coverage shall be subject to design permit approval under this section.

M. Canyon Watercourses and Wetlands. Development of the site, including any temporary disturbance, shall be set back thirty (30) feet in each direction from the center line of any watercourse, and twenty (20) feet from the boundary of any wetlands. The specific location of watercourse center lines and wetland boundaries shall be determined by qualified personnel under the City's direction.

N. Trails. The development shall incorporate public access trails to the extent feasible given the environmental sensitivities of the site.

O. Nonconforming Residential Structures and Uses. Nonconforming residential structures and nonconforming residential uses, as defined in Section 17.02.560, may be repaired, restored, reconstructed, enlarged or expanded in accordance with the provisions of Section 17.12.040.L.3 and Chapters 17.38 and 17.34 of this Title.

P. Recycling Area Requirements. For new subdivisions containing an area where solid waste is collected and loaded in a location which serves five or more living units, adequate, accessible and convenient areas for depositing, collecting and loading recyclable materials in receptacles shall be provided to serve the needs of the living units which utilize the area. This requirement shall also apply to all institutional buildings and City facilities (including buildings, structures, and outdoor recreation areas owned by the City) where solid waste is collected and loaded. The area shall be located and fully enclosed so as to adequately protect neighboring uses from adverse impacts such as noise, odor, vectors, wind-blown litter or glare. The area shall be

designed to prevent storm water run-on to the area and runoff from the area, and roofs shall be designed to drain away from neighboring properties. A sign clearly identifying all recycling and solid waste collection and loading areas and the materials accepted therein shall be posted adjacent to all points of direct access to the area.

SECTION 5: Section 17.32.070 in Chapter 17.32 of the Municipal Code is amended to read as follows:

17.32.070 – Exceptions—Setback requirements.

A. Notwithstanding any other provision of this title, certain structures or portions thereof may extend into a front, rear or side setback area to the extent permitted by the following chart:

1. Projections from a Building.

a. Overhanging Architectural Features (Such as Eaves, Cornices Canopies, Rain Gutters and Downspouts).

Front setback area:	May extend three (3) feet from the building into the front setback area, but no closer than five (5) feet from the front lot line.
Rear setback area:	May extend three (3) feet from the building into the rear setback area, but no closer than seven (7) feet from the rear lot line.
Side setback area:	May extend three (3) feet from the building into the side setback area, but no closer than two and one-half (2½) feet from the side lot line. Rain gutters and downspouts may extend no closer than two (2) feet from the side lot line. In the R-1 district, a noncombustible awning over the main entrance to a residence located at the side of the structure may extend four (4) feet from the building into any portion of the side setback area, but shall not extend over or drain onto the abutting property.

b. Cantilevered Windows No Greater Than Ten (10) Feet in Length that Do Not Include Any Floor Area (Such as Bay, Box, Bow, and Greenhouse Windows).

Front setback area:	May extend three (3) feet from the building into the front setback area, but no closer than five (5) feet from the front lot line.
Rear setback area:	May extend three (3) feet from the building into the rear setback area, but no closer than seven (7) feet from the rear lot line.
Side setback area:	May extend two (2) feet into the side setback area, but no closer than three (3) feet from the side lot line.

c. Supported Decks, Cantilevered Decks and Balconies.

Front setback area:	May extend five (5) feet from the building into the front setback area, but no closer than five (5) feet from the front lot line. Decks may be located atop a garage or carport approved under Section 17.32.070(A)(3)(a) and may extend to the front of the garage, but the railings of such deck may not exceed fifteen (15) feet in height above the elevation of the center of the adjacent street or four (4) feet from the surface of the deck, whichever is less, while at the same time maintaining the minimum railing height required by the building code.
Rear setback area:	May extend five (5) feet from the building into the rear setback area, but no closer than five (5) feet from the rear lot line. This exception shall not apply to the NCRO district.
Side setback area:	No exception permitted.

Modifications. The planning commission may approve a modification to the foregoing exceptions if there are not more than two (2) units on the site and the planning commission is able to make all of the following findings:

i. The modification is necessary in order to gain access to the property or to the dwelling unit on the property.

ii. The modification is necessary because of unusual or special circumstances relating to the configuration of the property.

iii. The visual impacts of the modification have been minimized.

d. Deck Railings within Setback Areas.

Front setback area:	May not be higher than four (4) feet from the surface of the deck.
Rear setback area:	May not be higher than four (4) feet from the surface of the deck.
Side setback area:	No exception permitted.

e. Stairs, Ramps and Landings (That Are Open and Uncovered and Serve Buildings with No More Than Two Units).

Front setback area:	No more than one set of stairs per dwelling unit may extend from the building into the front setback area. Each set of stairs must lead to the front entrance of the unit. The height of the stairway within the front setback area shall not exceed twenty (20) feet. Stairs on grade, sidewalks, and other flatwork constructed of noncombustible materials may be located anywhere within the front setback area.
Rear setback area:	No more than one set of stairs per dwelling unit may extend from the building into the rear setback area, but no closer than five (5) feet from the rear lot line. Stairs on grade, sidewalks, and other flatwork constructed of noncombustible materials may be located anywhere within the rear setback area.
Side setback area:	No more than one set of stairs per dwelling unit may extend from the building into the side setback area, but no closer than three (3) feet from the side lot line. Stairs on grade, sidewalks, and other flatwork constructed of noncombustible materials may be located anywhere within the side setback area.

Modifications. The planning commission may approve a modification to the foregoing exceptions for stairs, ramps and landings if there are not more than two units on the site and the planning commission is able to make all of the following findings:

i. The modification is necessary in order to gain access to the property or to the dwelling unit on the property.

ii. The modification is necessary because of unusual or special circumstances relating to the configuration of the property.

iii. The visual impacts of the modification have been minimized.

The planning commission may also approve a modification to the foregoing exceptions as part of a design permit being granted for three (3) or more units on the site, if the commission is able to make all of the findings listed above.

f. Accessibility Improvements (Such as Ramps, Elevators, and Lifts).

All Setback Areas. Accessibility improvements, such as ramps, elevators and lifts, may be allowed within any front, rear or side area setback upon the granting of an accessibility improvement permit by the zoning administrator, following the conduct of a hearing with ten (10) days notice thereof being given to the owners of all adjacent properties. The zoning administrator may issue the accessibility improvement permit if he or she finds and determines that:

i. The exception is necessary to meet special needs for accessibility of a person having a physical handicap which impairs his or her ability to access the

property and cannot be addressed through the standard exceptions to the setback area requirements under this Section 17.32.070.

ii. Visual impacts of the accessibility improvements located within a setback area have been minimized.

iii. The accessibility improvements will not create any significant adverse impacts upon adjacent properties in terms of loss of privacy, noise or glare.

iv. The accessibility improvements will be constructed in a sound and workmanlike manner, in compliance with all applicable provisions of the building and fire codes.

2. Small Free-Standing Structures.

a. Small Accessory Buildings and Roofed Structures (Such as Gazebos, Greenhouses, Garden and Utility Sheds).

Front setback area:	No exception permitted.
Rear setback area:	May be placed at any location within the rear setback area which is not less than five (5) feet from the rear lot line or three (3) feet from the interior side lot line, provided the building or structure, or portion thereof, within the rear setback area does not exceed eight (8) feet in height and does not have a floor area in excess of one hundred twenty (120) square feet.
Side setback area:	May be placed at any location within the interior side setback area which is not less than three (3) feet from the interior side lot line, provided the building or structure, or portion thereof, within the interior side setback area does not exceed eight (8) feet in height and does not have a floor area in excess of one hundred twenty (120) square feet. No exception is permitted for an exterior side setback area.

Modifications. The zoning administrator may approve a modification to the foregoing exceptions for small accessory buildings and roofed structures, following the conduct of a hearing with ten (10) days notice thereof being given to the owners of all adjacent properties, if the zoning administrator is able to make all of the following findings:

i. The modification will not result in overbuilding the site or result in the removal of significant greenscape.

ii. The modification will not create any significant adverse impacts upon adjacent properties in terms of loss of privacy, noise, or glare.

iii. The accessory structure is designed to be compatible with the primary dwelling(s) on the site.

A building permit shall be required to construct or install any accessory structure for which a modification has been granted under this subsection.

b. Unroofed and Openwork Roofed Garden Structures (Such as Arbors, Porticos, Trellises and Lath Houses).

Front setback area:	May not exceed eight (8) feet in height or cover more than fifteen percent (15%) of the front setback area.
Rear setback area:	May be placed at any location within the rear setback area which is not less than five (5) feet from the rear lot line, provided the structure, or portion thereof, within the rear setback area does not exceed eight (8) feet in height and does not cover more than fifteen percent (15%) of the rear setback area.
Side setback area:	May be placed at any location within the side setback area which is not less than three (3) feet from the side lot line, provided the structure, or portion thereof, within the side setback area does not exceed eight (8) feet in height and does not cover more than fifteen percent (15%) of the side setback area.

Modifications. The zoning administrator may approve a modification to the foregoing exceptions for unroofed and openwork roofed garden structures, following the conduct of a hearing with ten (10) days notice thereof being given to the owners of all adjacent properties, if the zoning administrator is able to make all of the following findings:

i. The modification will not result in overbuilding the site or result in the removal of significant greenscape.

ii. The modification will not create any significant adverse impacts upon adjacent properties in terms of loss of privacy, noise, or glare.

iii. The accessory structure is designed to be compatible with the primary dwelling(s) on the site.

3. Miscellaneous Improvements.

a. Garages and Carports and Parking Decks on Slopes of Fifteen Percent (15%) or Greater.

Front setback area:	Garages, carports and parking decks not more than fifteen (15) feet in height above the elevation of the center of the adjacent street in the R-1, R-2 and R-3 Districts and parking decks in the R-BA District may be placed at any location within the front setback area provided: (i) there is no encroachment into any side setback area, and (ii) the garage is approved by the city engineer, based upon a finding that no traffic or safety hazard will be created.
Rear setback area:	On through lots, garages, carports and parking decks not more than fifteen (15) feet in height above the elevation of the center of the adjacent street may be placed at any location within the rear setback area provided: (i) there is no encroachment into any side setback area, and (ii) the garage is approved by the city engineer, based upon a finding that no traffic or safety hazard will be created.
Side setback area:	No exception permitted.

b. Decorative Artwork, Ponds, Fountains and Similar Water Features, Not More Than Six (6) Feet in Height.

Front setback area:	May be placed at any location within the front setback area.
Rear setback area:	May be placed at any location within the rear setback area.
Side setback area:	No exception permitted.

B. The exceptions set forth in subsection 17.32.070(A) of this section shall not be construed to include chimney boxes, swimming pools and spas, exposed plumbing, or mechanical equipment such as heating and air conditioning units or pool pumps, and no exceptions to the setback requirements shall be permitted for any of these structures.

C. Any structure, architectural feature, wall, or other improvement lawfully constructed within a setback area and constituting a nonconforming structure as defined in Section 17.02.560, may be allowed to continue in accordance with the provisions of Chapter 17.38 of this title.

SECTION 6: Chapter 17.34 of the Municipal Code is amended in its entirety to read as follows:

Chapter 17.34
OFF-STREET PARKING

Sections:

17.34.010 Purposes of Chapter.
17.34.020 Minimum requirements.
17.34.030 Use restrictions.
17.34.040 Design standards.
17.34.050 Exemptions, exceptions and modifications.
17.34.060 Parking designated for clean air vehicles.
17.34.070 Bicycle parking.

17.34.010 Purposes of Chapter.

In addition to the objectives set forth in Section 17.01.030, the off-street parking requirements are included in the Zoning Ordinance to achieve the following purposes:

A. To provide for adequate off-street parking facilities by establishing clear relationships between building size and the parking required, so as to minimize the parking impacts of development upon surrounding properties.

B. To encourage housing designed for residents with special needs, including persons with disabilities.

C. To facilitate the maintenance and improvement of the existing building stock.

D. To provide for parking lot landscaping and permeable paving alternatives to reduce air and stormwater pollution.

E. To minimize dependence on automobile travel by encouraging transportation alternatives in project design where appropriate.

F. To implement and promote the goals and policies of the General Plan so as to guide and manage development in the city in accordance with such plan.

17.34.020 Minimum requirements.

A. The following minimum parking requirements shall apply to all buildings erected, new uses commenced, and to the area of extended uses commenced after the effective date of this Chapter. For any use not specifically mentioned in this Chapter, the planning commission shall determine the amount of parking required. All required off-street parking facilities shall be on-site unless specified differently in this Chapter or as permitted under Title 12 of this Code. Required off-street parking facilities need not be provided as covered parking unless specified differently in this chapter:

Uses:		Parking Requirements:
Single-family dwellings and group care homes--		
	Studio or 1-bedroom dwellings not more than 900 square feet in floor area:	1 off-street space (uncovered or covered)
	All other dwellings not exceeding 1,800 square feet in floor area:	1 off-street space plus 1 space which shall be in a garage or carport

	Dwellings exceeding 1,800 square feet in floor area on lots having less than 37.5 feet in frontage:	2 off-street spaces plus 1 space which shall be in a garage or carport
	Dwellings exceeding 1,800 square feet in floor area on lots of 37.5 feet frontage or greater:	2 on-street or off-street spaces plus 2 spaces which shall be in a garage or carport See Section 17.34.020.B.1 regarding garage and carport exclusions from the floor area calculation. Additional guest parking spaces shall be provided for all residential subdivisions of 5 (five) or more single-family residences, at the rate of 1 parking space for every 5 (five) units. Such spaces shall be located entirely within the public right-of-way and available for public use. Any accessible parking spaces required per Section 17.34.040.D shall count as guest parking spaces.
Secondary dwelling units		1 off-street space (uncovered or covered), plus 1 off-street space (uncovered or covered) if over 900 square feet in floor area and/or if more than 1 bedroom. See Section 17.34.020.B.1 regarding garage and carport exclusions from the floor area calculation.
Duplex or multiple family dwelling units; Mobilehome park units		
Studios		1 (uncovered or covered) space per unit.
1-bedroom units		1 ½ spaces (1 of which shall be covered) per unit; only 1 (covered) space required for units not over 900 square feet in floor area.
2-bedroom units		1 ½ spaces (1 of which shall be covered) per unit.
3-bedroom units or larger		2 spaces (1 of which shall be covered) per unit,

	plus 1 (uncovered or covered) space for units over 2,700 square feet See Section 17.34.020.B.1 regarding garage and carport exclusions from the floor area calculation. Additional guest parking spaces shall be provided for all developments of 5 (five) or more units at the rate of 1 parking space for every 5 (five) units. The accessible parking spaces required per Section 17.34.040.D shall count as guest parking spaces.
Emergency shelters	0.35 space per bed plus 1 space per staff member on the largest shift.
Hotels, motels	1 space per unit, plus applicable requirements for restaurants, bars and meeting halls.
Cultural facilities, meeting halls and places of worship	1 space for each 50 square feet of assembly area or 1 space for each 4 fixed seats, whichever is greater, plus 1 space for each 300 square feet of the remaining floor area of the building (meeting rooms not exceeding 750 square feet and ancillary to an office use shall be included with the floor area of the office in calculating the parking requirement for the office use).
Commercial recreation	3 spaces per ball court; 2.5 spaces per batting cage; 4 spaces per lane for bowling alleys; 2 spaces per tee for golf courses; 20 spaces per playing field; 2 spaces per shooting range; 2 spaces per horse stall for stables; 1 space per 100 square feet of water area for swimming pools. For commercial recreation uses that do not fall within the above categories, 1 parking space shall be required for every 4 fixed seats for spectators, 1 parking space per each 200 square feet of floor area used for indoor commercial recreation, and 1 parking space per each 1,000 square feet of site area used for outdoor commercial recreation.
Marinas	1 space per 0.75 berths.

Schools - public private or commercial	1 space for each classroom and office.
Hospitals	1 space per bed plus 1 space for each 2 employees on the largest shift.
Financial services	1 space for each 200 square feet of gross floor area.
Administrative office	1 space for each 300 square feet of gross floor area.
Professional office	1 space for each 250 square feet of gross floor area.
Retail stores, restaurants, bars, offices	1 space for each 300 square feet of gross floor area.
Service stations	2 spaces for each working bay plus 1 space for each employee on the largest shift.
Warehousing, light fabrication, food production, media studios, printing	1 space for each 1,000 square feet of gross floor area.
Convalescent hospitals, sanitariums, rest homes	1 space for each 7 beds plus 1 space for each 2 employees on the largest shift.

B. The minimum parking requirements shall be calculated according to the following:

1. All references to square feet shall be in regards to floor area as defined in Chapter 17.02. The floor area of garages and carports shall not be included in measuring floor area to calculate the parking requirements, except for any floor area exceeding 400 square feet within a garage or carport exclusively for the use of a single residential unit.

2. When more than one use subject to the parking requirements occupies a site, the requirements for each use shall be calculated separately. The floor area occupied by accessory uses, such as hallways, bathrooms, breakrooms, utility rooms and storage closets, shall be included in the calculation of the parking requirements for the associated primary use.

3. No parking shall be required for accessory structures 200 square feet or less in floor area.

4. When application of the parking requirements results in a fractional number, all fractions shall be rounded up from 0.5 to the next whole number, except when specified otherwise. No parking shall be required for uses for which the requirement is less than 0.5 space.

17.34.030 Use restrictions.

A. Required parking spaces, whether in a garage, carport or open area, shall not be used or converted for any other use that would impair their basic use as storage for motor vehicles.

B. All off-street parking spaces, whether in a garage, carport or open area, shall be so located as to be accessible to the use which they are intended to serve and to be usable for the parking of motor vehicles.

C. The required parking for each unit of a residential use shall be independently accessible from that required for any other unit. The property owner shall assign each unit the

exclusive use of at least one standard-size parking space, which shall be a covered parking space, if such is required for the unit. If tandem parking is provided, the two spaces in tandem shall be assigned together.

D. Guest parking spaces required for multiple family developments shall be posted by the property owner as available for 72-hour maximum use by the guests only of all residential units for which they are required.

17.34.040 Design standards.

A. Tables. Off-street parking facilities shall comply with the design standards as set forth in Table 1, applicable to standard-size vehicles, and Table 2, applicable to compact vehicles, which appear immediately following this section. Variations to these tables may be approved by the city engineer, consistent with professionally accepted standards, where no more than two forward turning movements would be necessary to enter or exit any parking space.

B. Surfacing and striping.

1. Any off-street parking area shall be surfaced with a minimum of five (5) inches of imported base material and a double application of asphalt and gravel to the city engineer's approval, so as to provide a durable and dustless surface and shall be so graded and drained as to dispose of all surface water accumulated within the area and shall be so arranged and marked as to provide for safe loading and unloading and parking of vehicles.

2. Parking spaces shall be striped in compliance with the design standards in this chapter, except that parking spaces for residential uses of no more than 2 units need not be striped. Plans for striping or restriping of required parking spaces shall be submitted for approval by the Community Development Department in compliance with these standards prior to any work done.

3. Permeable paving alternatives for parking spaces and low-traffic driveways may be approved by the City Engineer to reduce the discharge of pollutants into storm sewers, in which case the means of delineating the parking spaces shall be subject to the approval of the Community Development Department.

C. Compact cars. Up to fifty percent (50%) of the required parking spaces may be compact. For sites with two or more residential dwelling units, at least one standard-size parking space shall be provided for each unit. Compact parking spaces shall be labeled as such on the pavement, except for residential uses of not more than 2 units.

D. Handicapped parking. Parking designated as accessible by persons with disabilities shall be provided as required by State law.

E. Parallel parking. Parallel parking spaces shall be subject to the following standards: Spaces that are accessible from at least one end shall be eight (8) feet wide by twenty (20) feet long. Spaces located between other spaces or any obstruction shall be eight (8) feet wide by twenty-four (24) feet long. An additional one (1) foot width shall be provided where the parking space would be located next to any obstruction more than six (6) inches tall.

F. Tandem parking. Tandem parking where no more than one parking space need be vacant to access another parking space shall be recognized as meeting the parking requirements for residential uses, as long as the parking spaces for each unit are accessible independently from those for any other unit.

G. Garage design.

1. Garages constructed after __ [the date this section takes effect], excluding those rebuilt subject to Section 17.38.080 or 17.38.090, shall comply with the following:

Garage Type	Minimum Width	Minimum Depth
Single-car garage	10 ft.	20 ft.
Two-car garage		
On lots < 27 ft. wide	18 ft.	20 ft.
All other sites	20 ft.	20 ft.
2-in-tandem garage	10 ft.	40 ft.

No washing machines, driers, water heaters, work benches, support posts and similar obstructions shall be located within the area of minimum width by minimum depth.

2. For garages constructed after __ [the date this section takes effect], excluding those rebuilt subject to Section 17.38.080 or 17.38.090, garage doors shall be of a roll-up sectional design and shall be equipped with automatic garage door openers.

3. Garages existing as of __ [the date this section takes effect], constructed in compliance with applicable standards that were in effect at the time the garage was issued a building permit, shall be considered conforming until such time as they are substantially modified or replaced, except that Section 17.38.090 shall apply in the event that they are damaged or destroyed by fire, flood, wind, earthquake, or other calamity.

H. Driveway grades. Driveway grades shall not exceed twenty percent (20%) unless approved by the city engineer. The grade of driveways required as fire apparatus access roads shall be as approved by the fire chief.

I. On-site turnaround. 1. Off-street parking facilities shall be designed to provide on-site turnaround capability for a single-family residence, secondary dwelling unit or duplex with driveway access on any arterial street, including but not limited to Bayshore Boulevard or Guadalupe Canyon Parkway.

2. Off-street parking facilities shall be designed to provide on-site turnaround capacity for a complex of three or more units with driveway access on any arterial or collector street, including but not limited to Bayshore Boulevard, Guadalupe Canyon Parkway, Old County Road, San Bruno Avenue or that portion of Visitacion Avenue within the NCRO-2 District.

3. On-site turnaround capability shall be designed so as not to conflict with required parking spaces, including any recognized tandem spaces.

4. Dwelling units existing as of __ [the date this section takes effect] shall be exempt from this requirement per Section 17.34.050.A.

J. Parking lot landscaping. 1. For any open parking area containing ten (10) or more parking spaces subject to design permit approval, landscape plans shall be submitted to provide trees, shrubs and ground cover, as appropriate. The landscape plans shall provide at least one tree for every ten (10) parking spaces, which may be planted in diamond-shaped tree-wells or parkway strips, located so as to break up expanses of paved area.

2. The landscape plans shall use water conserving plants, plants that are not invasive, and plants and other landscape features that are appropriate to the context. New and replacement irrigated landscapes of one thousand (1,000) square feet or more shall be subject to the water conservation requirements in Chapter 15.70.

3. The landscape plans shall comply with the requirements of the federal Clean Water Act and acts amendatory thereof or supplementary thereto, applicable implementing regulations, and NPDES Permit No. CAS612008 and any amendment, revision or reissuance thereof.

K Bumper overhangs. Off-street parking facilities may be designed to accommodate bumper overhangs of not more than two and one-half (2 ½) feet length for standard size parking spaces and two (2) feet for compact parking spaces. Bumper overhangs shall not block any required pedestrian accessway. Wheelstops, curbs and landscaping within the area of any bumper overhang shall not exceed five (5) inches in height above the pavement.

Table 1

Design Requirements for Standard Sized Vehicles

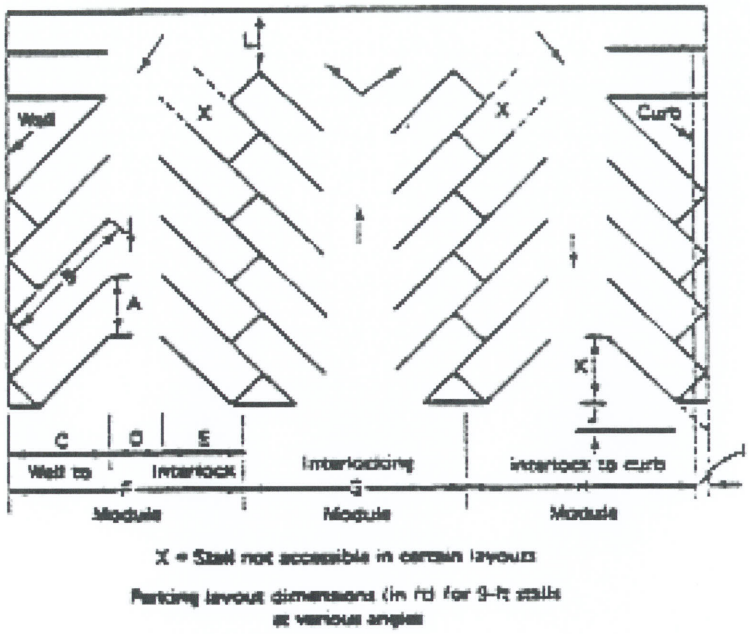

X = Stall not accessible in certain layouts

Parking layout dimensions (in ft) for 9-ft stalls at various angles

Table 1.
Design Requirements for Standard-Size Vehicles

		Parking Angle			
Dimension	**On Diagram**	**45°**	**60°**	**75°**	**90°**
Stall width, parallel to aisle	A	12.7 ft.	10.4 ft.	9.3 ft.	9.0 ft.
Stall length of line	B	25.0 ft.	22.0 ft.	20.0 ft.	18 ft.
Stall depth to wall	C	17.5 ft.	19.0 ft.	19.5 ft.	18
Aisle width between stall lines	D	12.0 ft.	16.0	23.0 ft.	26.0 ft.
Stall depth to interlock	E	15.3 ft.	17.5 ft.	18.8 ft.	18.5 ft.
Module, wall to interlock	F	44.8	52.5	61.3	63.0
Module, interlocking	G	42.6	51.0	61.0	63.0
Module, interlock to curb face	H	42.8	50.2	58.8	60.5
Bumper overhang (typical)	I	2.0	2.3	2.5	2.5
Offset	J	6.3	2.7	0.5	0.0
Setback	K	11.0	8.3	5.0	0.0
Cross aisle, one-way	L	14.0	14.0	14.0	14.0
Cross aisle, two-way	L	24.0	24.0	24.0	24.0

Table 2.
Design Requirements for Compact Vehicles

Parking Angle	**Stall Width**	**Aisle Length Per Stall**	**Depth of Stalls at Right Angle to Aisle**	**Bumper Overhang**	**Aisle Width**	**Wall to Wall Module**
45°	8.0 ft.	10.5 ft.	17.0 ft.	1.7 ft.	11.0 ft.	45.0 ft.
60°	8.0 ft.	8.7 ft.	16.7 ft.	1.8 ft.	14.0 ft.	49.4 ft.
75°	8.0 ft.	7.8 ft.	16.3 ft.	1.9 ft.	17.4 ft.	52.0 ft.
90°	8.0 ft.	7.5 ft.	16.0 ft.	2 ft.	20.0 ft.	52.0 ft.

17.34.050 Exemptions, exceptions and modifications.

A. Dwelling units existing as of __ [the date this section takes effect], constructed in compliance with applicable standards that were in effect at the time the dwelling unit was issued a building permit, shall be considered conforming in terms of the parking required by this chapter until such time as they are expanded, except as permitted in Subsection B of this Section, or replaced, except that Section 17.38.090 shall apply in the event that they are damaged or destroyed by fire, flood, wind, earthquake, or other calamity.

B. A single-family dwelling or mobilehome existing as of __ [the date this section takes effect] which does not have off-street parking facilities that conform with the requirements of this chapter may be expanded by a cumulative total of not more than four hundred (400) square feet of floor area without the need to bring the parking facilities into conformance or to obtain a use permit under Section 17.34.050.I of this chapter; furthermore, such a single-family dwelling or mobilehome may be expanded to a total floor area of not more than one-thousand two-hundred (1,200) square feet, if the total number of bedrooms does not exceed two. The following restrictions and requirements shall apply:

1. The structure to be expanded shall constitute the principal structure and the only dwelling unit located on the site or mobilehome park space.

2. The square footage permitted by this section shall be reduced by the square footage of any prior expansion of the same structure that was made since January 1, 1986, regardless of whether an exception, use permit, variance, or other approval was granted for such prior expansion.

3. The square footage permitted by this section shall be reduced by the square footage of any prior permitted expansion of the same structure which resulted in the loss of required parking spaces, such as the conversion of a garage to living area.

4. The expansion shall not result in the loss of any existing required off-street parking spaces that would increase the nonconformity of the existing off-street parking facilities.

5. The proposed development shall comply with the requirements of Section 17.01.060 of this title, unless: (a) the structure to be expanded is located upon a lot of record, and (b) a public street abutting such lot of record provides the principal means of access to that lot.

6. The total floor area shall not exceed the maximum permitted under the floor area ratio regulations for the applicable district, including or excluding covered parking as provided under those regulations.

7. See Section 17.34.020.B.1 regarding garage and carport exclusions from the floor area calculation.

C. Storefront uses in the NCRO-2 District shall be exempt from the requirements of this Chapter.

D. For residential units designed and dedicated for use by persons with disabilities, subject to restrictions approved by the City and recorded with the County of San Mateo, the parking requirement shall be 1 assigned van-accessible parking space (either covered or uncovered at the discretion of the applicant) per dedicated unit. Such spaces shall be conveniently located along an accessible path of travel to the dedicated unit, but shall not count as or conflict with the parking required to be reserved for persons with disabilities per Title 24 (Section 17.34.040.D).

E. For a residential unit occupied by a person with a disability, the Zoning Administrator shall have authority to grant an Accessibility Improvement Permit authorizing a modification to any of the parking requirements prescribed by this Chapter, following the

conduct of a hearing with 10 days notice thereof being given to the owners of all adjacent properties. The Zoning Administrator may issue the Accessibility Improvement Permit if he or she finds and determines that:

1. The modification is necessary to meet special needs for a person having a disability;

2. The modification will not create any significant adverse impacts upon adjacent properties;

3. Any construction resulting from the modification will be done in a sound and workmanlike manner, in compliance with all applicable provisions of the building and fire codes;

4. Strict enforcement of the specified regulation is not required by either present or anticipated future traffic volume or traffic circulation on the site; and

5. The granting of the modification will not create or intensify a shortage of on-street parking spaces.

F. For residential units designed and dedicated for use by households with one or more members who are 62 years of age or older, subject to restrictions approved by the City and recorded with the County of San Mateo, the minimum parking requirement shall be two-thirds (67%) of the standard requirement based upon unit size as set forth in Section 17.34.020. This minimum parking requirement may be further reduced as an "additional incentive" required for projects that comply with the California "density bonus" law (California Government Code Sections 65915 and 65915.5).

G. For residential units dedicated to be affordable to households with very-low, low, or moderate incomes, subject to restrictions approved by the City and recorded with the County of San Mateo, the minimum parking requirement may be reduced as an "additional incentive" required for projects that comply with the California "density bonus" law (California Government Code Sections 65915 and 65915.5). This reduction shall be in addition to any exception that may be applicable under Sections 17.34.050.D or 17.34.050.E. Affordable housing projects that do not qualify for a density bonus and additional incentives may obtain a reduction in the minimum parking requirement through application for a modification under Section 17.34.050.I.

H. Parking within the public right-of-way at the property's frontage may be recognized administratively only for single-family residences, secondary dwelling units and duplexes, subject to the approval of the city engineer.

1. Off-street parking facilities which partially encroach within the public right-of-way may be recognized administratively, subject to the following requirements:

a. The parking space shall not be located within a portion of the right-of-way that could be required for lanes of traffic per Section 12.24.010.B.1.

b. The parking space shall not block any portion of a required sidewalk.

c. The parking space shall be located so as to minimize its impact upon any existing on-street parking, so as to produce a net increase in the number of on- and off-street parking spaces.

d. The parking space shall comply with Sections 12.05.020 and 12.24.015, as applicable.

e. If the parking space is at an angle to the street, clearance behind the space shall be provided equivalent to the minimum aisle width in Table 1 (for standard-size spaces) or Table 2 (or compact spaces).

f. If the parking space is parallel to the street, it shall comply with Section 17.34.040.E; such parallel parking may be provided within a driveway to a garage or carport.

2. On-street parking spaces located entirely within the public right-of-way in compliance with Section 12.24.010.B.1 may be recognized administratively only for sites with more than 37.5 (thirty seven and one-half) feet of frontage. On-street parking spaces may also be recognized as the guest parking required for a residential subdivision of 5 (five) or more single-family residences per Section 17.34.020.A.

I. The planning commission shall have authority to grant a use permit authorizing a modification to any of the parking regulations prescribed by this Chapter. The provisions of Chapter 17.40 of this Title shall govern the filing and processing of the application for a use permit pursuant to this Section; provided, however, that in addition to the findings required for the granting of a use permit, as set forth in Section 17.40.060, no use permit shall be granted for a modification to a parking regulation unless the planning commission also finds and determines that:

1. Strict enforcement of the specified regulation is not required by either present or anticipated future traffic volume or traffic circulation on the site; and

2. The granting of the use permit will not create or intensify a shortage of on-street parking spaces, given, for example, the availability of existing or improved on/off-street parking which may not fully meet the requirements of this chapter.

3. Full compliance with the parking requirements is not reasonably feasible due to existing structural or site constraints. This finding shall not be required for residential units dedicated to be affordable to households with very-low, low, or moderate incomes or designed and dedicated for use by households with one or more members who are 62 years of age or older, subject to restrictions approved by the City and recorded with the County of San Mateo.

J. The planning commission shall have authority to grant a parking variance for nonresidential development to allow required parking to be located off-site. The provisions of Chapter 17.46 of this Title shall govern the filing and processing of the application for a variance pursuant to this Section; provided, however, that instead of the findings required for the granting of a variance, as set forth in Section 17.46.010, no such parking variance shall be granted unless the planning commission finds and determines that:

1. The variance would be an incentive to, and a benefit for, the nonresidential development; and

2. The variance will facilitate access to the nonresidential development by patrons of public transit facilities.

17.34.060. Parking Designated for Clean Air Vehicles. Parking spaces designated for low-emitting, fuel-efficient and carpool/van pool vehicles, as defined in Section 5.102 of the California Green Building Standards Code, shall be provided for newly constructed non-residential buildings according to the following schedule:

TOTAL NUMBER OF PARKING SPACES	NUMBER OF REQUIRED SPACES
0-9	0

10-25	1
26-50	3
51-75	6
76-100	8
101-150	11
151-200	16
201 and over	At least 8 percent of total

The designated spaces shall be marked "CLEAN AIR VEHICLE" with stall-striping paint, such that the lower edge of the last word aligns with the end of the stall striping so it will be visible beneath a parked vehicle.

17.34.070. Bicycle Parking. Short-term and long-term parking for bicycles shall be provided for newly-constructed non-residential buildings as follows:

A. Short Term Parking. One or more permanently anchored bicycle racks shall be provided within 200 feet of the visitors' entrance and readily visible to passers-by. The required bicycle parking capacity shall be set as follows:

1. 1 bike rack space per 10,000 square feet of retail floor area;
2. 1 bike rack space per 150,000 square feet of office floor area;
3. Other non-residential uses: five percent (5%) of visitor motorized vehicle parking capacity.
4. Any fractional result shall be rounded up.
5. For all non-residential buildings, the minimum capacity shall be for two bicycles.

B. Long Term Parking. Permanently anchored bike racks inside covered, lockable enclosures or bicycle rooms or permanently anchored bicycle lockers shall be provided at convenient locations from the street. The required bicycle parking capacity shall be set as follows:

1. 1 space per 20,000 square feet of warehouse floor area;
2. 1 space per 6,000 square feet of retail floor area;
3. 1 space per 6,000 square feet of office floor area;
4. Other non-residential uses: five percent (5%) of motorized vehicle parking capacity.
5. Any fractional result shall be rounded up.
6. For all non-residential buildings, the minimum capacity shall be for one bicycle.

SECTION 7: Section 17.38.080 in Chapter 17.38 of the Municipal Code is amended to read as follows:

17.38.080. Alteration or expansion of nonconforming structures.

A. A nonconforming structure shall not be altered, enlarged, or expanded so as to increase the degree of noncompliance or otherwise increase the discrepancy between existing conditions and the requirements of this Title.

B. Structural alterations may be permitted when necessary to comply with the requirements of law.

C. The prohibitions of this Section shall not apply to any alteration, enlargement or expansion for which a variance is granted pursuant to Chapter 17.46 or a use permit is granted pursuant to Chapter 17.34 of this Title.

SECTION 8: Where a use permit, design permit or variance approval has been issued through final action by the City prior to the effective date of this Ordinance, or where such planning permit approval is not required and a complete building permit application has been submitted prior to the effective date of this Ordinance, the holder of such use permit, design permit or variance approval or complete building permit application may proceed to construct the improvements or establish the use authorized by such permit or approval and the same shall be exempted from any conflicting regulations that may be contained in this Ordinance.

SECTION 9: If any section, subsection, sentence, clause or phrase of this Ordinance is for any reason held by a court of competent jurisdiction to be invalid or unconstitutional, such decision shall not affect the validity of the remaining portions of this Ordinance. The City Council of the City of Brisbane hereby declares that it would have passed this Ordinance and each section, subsection, sentence, clause and phrase thereof, irrespective of the fact that one or more sections, subsections, sentences, clauses or phrases may be held invalid or unconstitutional.

SECTION 10: This Ordinance shall be in full force and effect thirty days after its passage and adoption.

* * *

The above and foregoing Ordinance was regularly introduced and after the waiting time required by law, was thereafter passed and adopted at a regular meeting of the City Council of the City of Brisbane held on the _____ day of _____, 2016, by the following vote:

AYES:
NOES:
ABSENT:
ABSTAIN:

_____
Mayor

ATTEST:

_____
City Clerk

APPROVED AS TO FORM:

Michael Roush

Michael Roush, City Attorney